Design/System/Construction/Assembly Usage Disclaimer

- Authorities Having Jurisdiction should be consulted in all cases as to the particular requirements covering the installation and use of UL Certified products, equipment, system, devices, and materials.
- Authorities Having Jurisdiction should be consulted before construction.
- Fire resistance assemblies and products are developed by the design submitter and have been investigated by UL for compliance with applicable requirements. The published information cannot always address every construction nuance encountered in the field.
- When field issues arise, it is recommended the first contact for assistance be the technical service staff provided by the product manufacturer noted for the design. Users of fire resistance assemblies are advised to consult the general Guide Information for each product category and each group of assemblies. The Guide Information includes specifics concerning alternate materials and alternate methods of construction.
- Only products which bear UL's Mark are considered Certified.

Roof Deck Constructions

See General Information for Roof Deck Constructions

Construction No. **90**

October 03, 2023

Uplift — Class 90
Fire Not Investigated

Cookies on UL Solutions
We use cookies to personalize content and ads, to provide social media features and to analyze our traffic. We also share information about your use of our site with our social media, advertising and analytics partners. Learn more

Cookies Settings | Reject All | Accept All Cookies

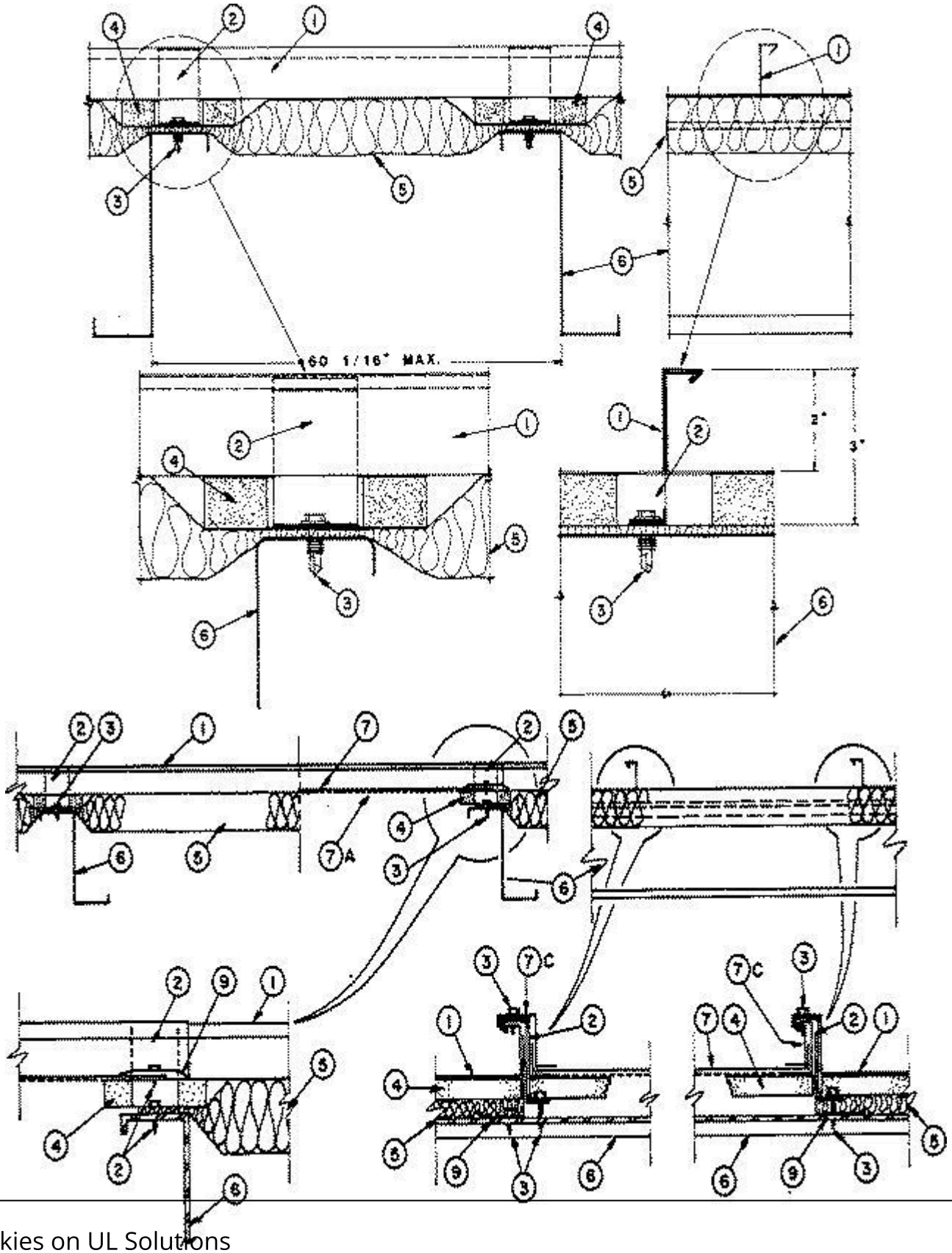

Cookies on UL Solutions

We use cookies to personalize content and ads, to provide social media features and to analyze our traffic. We also share information about your use of our site with our social media, advertising and analytics partners. Learn more

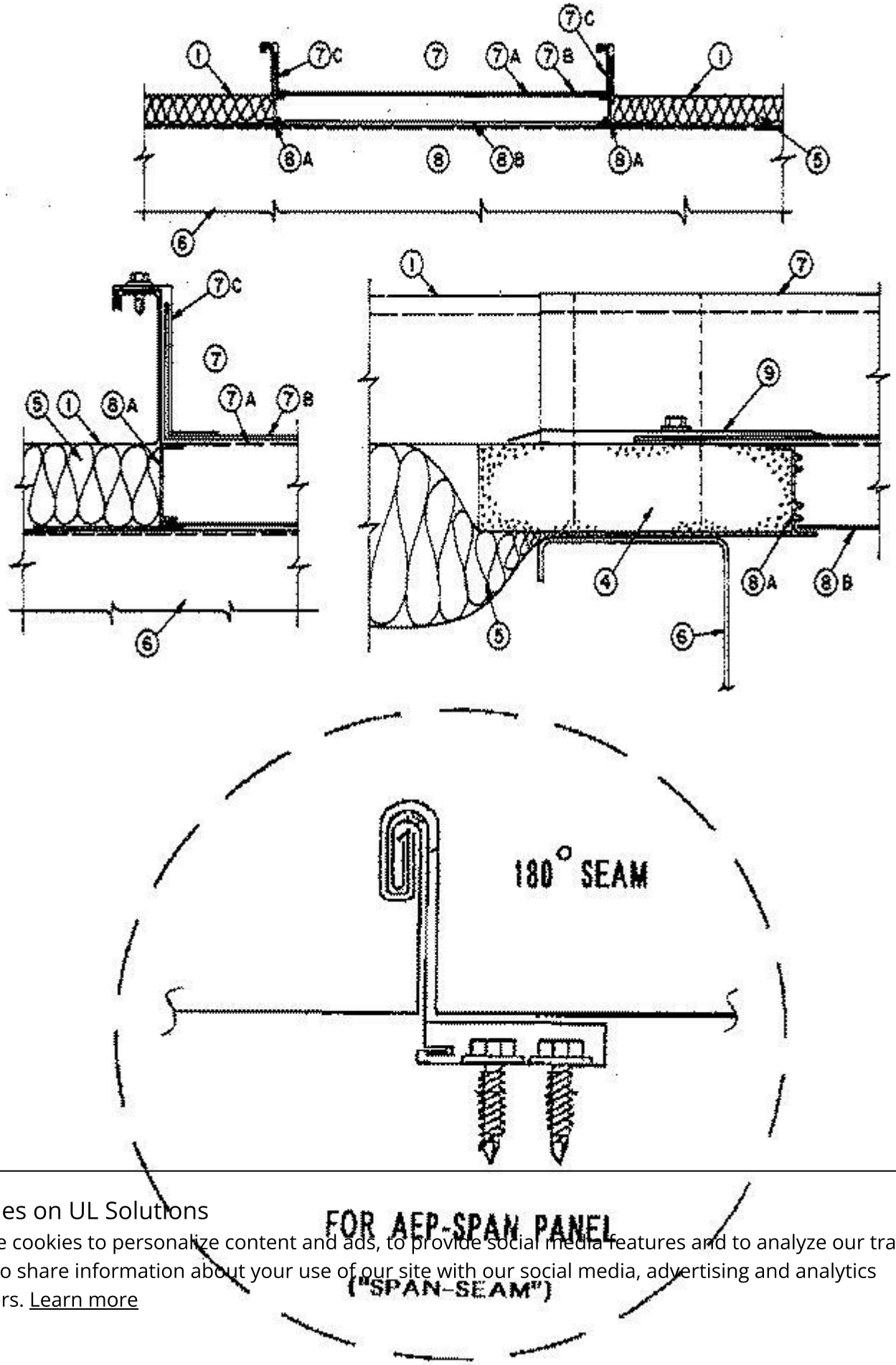

Cookies on UL Solutions
We use cookies to personalize content and ads, to provide social media features and to analyze our traffic. We also share information about your use of our site with our social media, advertising and analytics partners. Learn more

1. **Metal Roof Deck Panels* —** No. 24 MSG min gauge coated steel, max width 16 in. Panels continuous over two or more spans. End lap to occur over purlins and to include End Lap Back-up Plate (Items 2B or 2C). Ends of panels overlapped 6 in. Side laps to be tightened and crimped with a special motorized crimping machine at a minimum 45 degree angle with crimping process to include tabs of Panel Clips (Item 2). A bead of sealing compound may be used at panel end and side laps.

A-LERT ROOF SYSTEMS (View Classification) — "A-Lert Loc"

ADVANCED ROOFING TECHNOLOGY INC (View Classification) — "ARTK 12" and "ARTK 16"

AEGIS ROOFING COMPANY (View Classification) — "Aegis 50 Architectural Profile"

AEP SPAN, DIV OF ASC PROFILES (View Classification) — "Span-Lok" or "Span-Lok HP" (90° Seam) or "SpanSeam" (180° Seam)

ARCHITECTURAL SHEETMETAL PRODUCTS INC (View Classification) — "ASP ML-200"

BAKER ROOFING INC (View Classification) — "2 in. Mechanical Seamed"

BUTLER MANUFACTURING, DIV OF BLUESCOPE BUILDINGS NORTH AMERICA INC (View Classification) — "VSRII"

CENTRAL TEXAS METAL ROLLFORMING INC (View Classification) — "SPANLOC 200"

CENTURION INDUSTRIES INC, DBA TFC CANOPY (View Classification) — "Centurion 1624M"

CHIEF INDUSTRIES INC (View Classification) — "MVF" or "MVP"

CONSTRUCTION METAL PRODUCTS INC (View Classification) — "CMP Series 2500"

CORLE BUILDING SYSTEMS INC (View Classification) — "Vertical Lok"

CUSTOM-BILT METALS (View Classification) — "CB-2000"

DREXEL METALS INC (View Classification) — "DMC 200S"

DREXEL METALS, INC. (View Classification) — "Met-Fab III"

EAST TEXAS ARCHITECTURAL SHEETMETAL L L C, DBA ETAS INC (View Classification) — "2" SPANLOCK"

ENCORE STEEL BUILDING COMPANY (View Classification) — "SSR-LOK 210"

ENGLERT INC (View Classification) — “Series 2400” and "Series 2500"

Cookies on UL Solutions

We use cookies to personalize content and ads, to provide social media features and to analyze our traffic. We also share information about your use of our site with our social media, advertising and analytics partners. Learn more

FABRAL INC (View Classification) — "PowerSeam"

H&H METAL PRODUCTS INC (View Classification) — "Uni-SeamLoc" (180° Seam)

HPM BUILDING SUPPLY (View Classification) — "Custom-Lock 2"

KIRBY BUILDING SYSTEMS INC (View Classification) — "RoofLok" and "RoofLok Plus"

LAWMAN HEATING & COOLING INC (View Classification) — "SS210A"

MBCI (View Classification) — "BattenLok", "BattenLok HS" or "SuperLok"

MCELROY METAL MILL INC (View Classification) — "ABC JSM 200"

MESCO METAL BUILDINGS (View Classification) — "BattenLok", "BattenLok HS" or "SuperLok"

METAL PANELS INC (View Classification) — "SSLF2A"

METAL PANEL SYSTEMS INC (View Classification) — "MP-200" or "UC6"

METAL ROOFING SYSTEMS INC (View Classification) — "MRS System 2500"

METAL SALES MANUFACTURING CORPORATION (View Classification) — "T-Span" or "T-Span 180" (180° Seam)

METALLION INDUSTRIES INC (View Classification) — "MI200" or "MI210"

NCI BUILDING SYSTEMS L P (View Classification) — "BattenLok", "BattenLok HS" or "SuperLok"

NEW TECH MACHINERY CORP (View Classification) — "SS210A"

NEXT PHASE ROOFING (View Classification) — "NP 210A"

PETERSEN ALUMINUM CORP (View Classification) — "Tite-Loc" and "Tite-Loc Plus"

PINNACLE STRUCTURES INC (View Classification) — "PINNACLE BATTENLOK" and "PINNACLE SUPERLOK"

PMRS (View Classification) — "200MS"

RPR INC, DBA RAIN PROOF ROOFING (View Classification) — "RP210"

ROLLFAB METAL BUILDING PRODUCTS (View Classification) — "MS-200HP/90" and "MS-200HP/180"

ROOF WORKS FABRICATING L L C (View Classification) — "SS210"

ROOFMASTERS ROOFING & SHEET METAL CO INC (View Classification) — "Loc Master"

SAN ANTONIO QUALITY METALS (View Classification) — "ML-200"

SHEFFIELD METALS INTERNATIONAL (View Classification) — "SMI 2" A Mechanical Seam"

Cookies on UL Solutions
We use cookies to personalize content and ads, to provide social media features and to analyze our traffic. We also share information about your use of our site with our social media, advertising and analytics partners. Learn more

STORAGE STRUCTURES INC. (View Classification) — "SS210A"

STREAMLINE ROOFING & CONSTRUCTION INC (View Classification) — "200MS"

SUPERIOR METAL SYSTEMS INC (View Classification) — "SMS 416"

TAYLOR METAL INC, DBA TAYLOR METAL PRODUCTS (View Classification) — "Mechanical Seam 200"

THE BRYER CO (View Classification) — "TBC-SUPERSEAM"

THREE DIAMOND FAB LLC (View Classification) — "TDF-SSC200"

UNION CORRUGATING CO (View Classification) — "ML200"

U S METALS L L C (View Classification) — "US-210A"

VARCO PRUDEN BUILDINGS, DIV OF BLUESCOPE BUILDINGS NORTH AMERICA INC (View Classification) — "SLR II"

WESTERN STATES METAL ROOFING (View Classification) — "MS2®"

ZIMMERMAN METALS INC (View Classification) — "SS2000"

2. **Roof Deck Fasteners* —** (Panel Clips) — Two part assembly: Base, 1 in. wide approximately 1-1/4 in. long with upper segment folded over lower end of tab. Fabricated from 0.050 in. thick coated or stainless steel. Upper tab 3 in. wide, maximum tab height 3-1/2 in. with lower end formed to engage base. Fabricated from 0.023 in. thick coated or stainless steel.
Spacing for clip to be 5 ft 0-1/16 in. OC with clips located over purlins (Item 6).

2A. **Roof Deck Fasteners* —** (Panel Clips) — (Not Shown) — No. 22 MSG min coated steel. Clips located at panel sides. Guide Holes in bottom of clip to accommodate two screw fasteners (Item 3).
BUILDING PRODUCTS DEVELOPMENT INC (View Classification) — "NC3300", "NCF-3300", "NCF-3300-SS" Series Clip

FABRAL INC (View Classification) — "AMP-Loc High Fixed", "AMP-Loc Low Fixed", "AMP-Loc High Floating", "AMP-Loc Low Floating", "PowerSeam Low Floating", "PowerSeam High Floating"

HPM BUILDING SUPPLY (View Classification) — "CL2 Clip"

MCELROY METAL MILL INC (View Classification) — "ABC JSM 200 Utility"

NCI BUILDING SYSTEMS L P (View Classification) — "BattenLok High or Low, Fixed or Floating Clip"; "BattenLok Utility Clip" — "SuperLok High or Low, Fixed or Floating Clip"; "SuperLok Utility Clip"

2B. **End Lap Back-Up Plate* —** (Not Shown) — No. 18 MSG min gauge coated steel. Max length 48 in. Width varies with type of purlin with a max of 16-1/2 in.

2C. **End Lap Back-Up Plate* —** (Not Shown) — No. 16 MSG min coated steel.
NCI BUILDING SYSTEMS L P (View Classification) — "BattenLok Back-Up Plate" or "SuperLok Back-Up Plate"

2D. **End Lap Back-Up Plate —** (Not Shown) — used with HCI Steel Products' Panels - 6 in. wide, 15-1/2 in. long, fabricated from 16 MSG min thick steel (50,000 psi min yield strength).

Cookies on UL Solutions
We use cookies to personalize content and ads, to provide social media features and to analyze our traffic. We also share information about your use of our site with our social media, advertising and analytics partners. Learn more

2E. **Roof Deck Fastener* —** (End Lap Back up Plate) — (Not Shown) — Used with AEP-Span "SL-216" panels. Length 10-1/2 in., width 15-3/4 in., No. 16 MSG min thick coated steel. Slipped under lower panel at end lap. Panels fastened together using four No. 1/4-14 by 1-1/8 in. long self-drilling, self-tapping, hex-washer head, plated steel screws with a 5/8 in. OD steel washer and a sealing washer. Screws spaced 4 in. OC beginning 2 in. from ribs.
AEP SPAN, DIV OF ASC PROFILES (View Classification) — "SL-216 End-Lap Back-Up Plate"

2F. **Roof Deck Fasteners* —** (Panel Clip) — (Not Shown) — Two part assembly; A base fabricated from No. 16 MSG min coated steel and an upper tab fabricated from No. 22MSG min coated steel. Clips fastened to purlins with two fasteners per clip. See Item No. 3 for description of fasteners.
AEP SPAN, DIV OF ASC PROFILES (View Classification) — "SL-2.5 in. Standard Clip"

BUTLER MANUFACTURING, DIV OF BLUESCOPE BUILDINGS NORTH AMERICA INC (View Classification) — "VSR11 2.5 Clip"

FABRAL INC (View Classification) — "AMP-Loc Low Floating", "AMP-Loc High Floating"

VARCO PRUDEN BUILDINGS, DIV OF BLUESCOPE BUILDINGS NORTH AMERICA INC (View Classification) — "SLR11 2.5 Clip"

2G. **Roof Deck Fasteners* —** (Panel Clip) — (Not Shown) — Two part assembly; A base fabricated from No. 16 MSG min coated steel and upper tab fabricated from No. 22 MSG min coated steel. Clips fastened to purlins using two fasteners per clip. See Item No. 3 for description of fasteners.
METAL SALES MANUFACTURING CORPORATION (View Classification) — "T-Span Clip"

2H. **Roof Deck Fasteners* —** (Panel Clips) — (Not Shown) — Used with "Tite-Loc" or "Tite-Loc Plus" panels.
One piece assembly; 3 in. wide, approximately 2 in. high with two or three guide holes in base. Fabricated from No. 22 MSG coated steel.

PETERSEN ALUMINUM CORP (View Classification) — "Tite-Loc Utility Clip" and "Tite-Loc Plus Utility Clip"

One piece assembly; 3 in. wide, approximately 2-3/8 in. or 3 in. high, with three guide holes in base. Fabricated from No. 22 MSG coated steel.

PETERSEN ALUMINUM CORP (View Classification) — "Tite-Loc Low/High Fixed Clip", "Tite-Loc Plus Low/High Fixed Clip", "Tite-Loc AR Fixed Clip" and "Tite-Loc AR Sliding Clip", "Tite-Loc Plus AR Fixed Clip" and "Tite-Loc Plus AR Sliding Clip"

Two piece assembly; base approximately 2 in. wide, 1-11/16 in. long formed to engage upper tab. Fabricated from No. 16 MSG coated steel. Tab approximately 4-5/16 in. wide; 2-3/8 in. or 2-7/8 in. high, formed to engage base. Fabricated from No. 22 MSG coated steel. Base to have two guide holes.

PETERSEN ALUMINUM CORP (View Classification) — "Tite-Loc Sliding Clip" and "Tite-Loc Plus Sliding Clip"

3. **Fasteners —** (Screws) — For attaching panel clips to purlins- 1/4 - 14 by 1 in. long shoulder or stand off type, self-drilling, self-tapping, hex-head plated steel screws. One screw per clip to be used. As an alternate fastener for panel clip to purlin attachment a No. 12-14 by 1 in. long self-drilling, self-tapping, hex-head plated steel screw may be used. Fasteners used at end laps-1/4 - 10 by 1 in. long self-drilling, self-tapping, hex-head plated steel screws with 1/2 in. OD metal backed sealing washer, spaced on a 1, 3, 3-1/2, 3-1/2, 3, 1 in. pattern.
For Building Unit-to-Panel side lap connections-No. 18-9 by 1 in. long self-drilling, self-tapping, hex-head plated steel screws with a separate 1/2 in. OD plated steel washer and a neoprene sealing washer. One fastener required at each end and one at midspan of each rib of the Building Unit.

For Reinforcing Plate-to-Building Unit end lap connection-No. 18-9 by 1 in. long self-drilling, self-tapping, hex-head plated steel screws with a separate 1/2 in. OD plated steel washer and a neoprene sealing washer. Spacing to be nom 2-1/2, 5-1/2, 5-1/2 in. beginning at the female rib of the Building Unit.

Cookies on UL Solutions

We use cookies to personalize content and ads, to provide social media features and to analyze our traffic. We also share information about your use of our site with our social media, advertising and analytics partners. Learn more

4. **Thermal Spacer Block —** Used over purlins. Expanded polystyrene 1 in. thick, 5 in. wide, 48 in. long with cutout to accommodate panel clips.

4A. **Thermal Spacer Block —** (Optional) — (Not Shown) — Used over purlins. Expanded polystyrene 1 in. thick max, 3 in. wide, cut to fit between panel clips (For use with Item 2A only.

5. **Insulation —** (Optional) — Any compressible blanket type 6 in. max thickness before compression. An additional 2 in. max thickness of compressible blanket insulation may be used between purlins. The additional insulation shall not be sandwiched between the upper flange of the Purlin and the Metal Roof Deck Panel.

6. **Purlins —** Z-shaped, 0.056 in. min thickness steel (40,000 psi min yield strength) or min "H" series open web steel joists. Maximum spacing 60-1/4 in.

7. **Building Units* —** (Optional) — Prefabricated assemblies of a Skylight Panel, (Item 7B), mounted in a Perforated Metal Roof Deck Panel, (Item 1), with Flashings, (Item 7C). Assembly continuous over two spans erected in the same manner as for Metal Roof Deck Panels.
NCI BUILDING SYSTEMS L P (View Classification) — "BattonLok Light Transmitting Panel" or "SuperLok Light Transmittting Panel" or "Riveted Rail SuperLok/BattenLok HS LTP"

7A. **Perforated Metal Roof Deck Panels —** No. 24 MSG min gauge coated steel perforated in the flat portion.

7B. **Plastic Skylight* —** (Translucent, glass fiber reinforced plastic panel) — Thickness 0.04 in. (nom) formed to fit the Perforated Metal Roof Deck Panel, (Item 7A).

7C. **Flashing —** No. 20 MSG min gauge coated steel. Attached to the Building Unit to retain and flash the Plastic Skylight to the Perforated Metal Roof Deck Panel.

8. **Insulating Units —** (Optional) — Prefabricated assemblies of a Plastic Insulating Skylight Pan, (Item 8B), mounted in an Aluminum Frame, (Item 8A). Assembly spans between adjacent Purlins beneath a Building Unit only.

8A. **Aluminum Frame —** Extruded aluminum alloy, 0.055 in. min thickness, shop assembled.

8B. **Plastic Insulating Skylight Pan —** (Translucent, glass fiber reinforced modified acrylic plastic panel). Shop assembled in Aluminum Frame, (Item 8A).

9. **Insulation Trim —** No. 24 MSG min gauge coated steel. Used at the sides of the Building Unit.

10. **Reinforcing Plate —** (Not Shown) — Min 0.05 in. thick coated steel. Max length 15-1/2 in., width 5-1/4 in. Used at downslope end lap of Building Unit to Metal Roof Deck Panel.

11. **Stiffenner Plate —** (Not Shown) — To be used with the "Riveted Rail SuperLok/BattenLok HS LTP" panel—Min. 18 ga., 8 in. by 1ft-3-1/2in., attached at the midpoint of the panel.
Refer to General Information, Roof Deck Constructions (Roofing Materials and Systems Directory) for items not evaluated.

*** Indicates such products shall bear the UL or cUL Certification Mark for jurisdictions employing the UL or cUL Certification (such as Canada), respectively.**

Last Updated on 2023-10-03

The appearance of a company's name or product in this database does not in itself assure that products so identified have been manufactured under UL Solutions' Follow - Up Service. Only those products bearing the UL Mark should be considered to be Certified and covered under UL Solutions' Follow - Up Service. Always look for the Mark on the product.
UL Solutions permits the reproduction of the material contained in Product iQ subject to the following conditions: 1. The Guide Information, Assemblies, Constructions, Designs, Systems, and/or Certifications (files) must be presented in their entirety and in a non-misleading manner, without any manipulation of the data (or drawings). 2. The statement "Reprinted from Product iQ with permission from UL Solutions" must appear adjacent to the extracted material. In addition, the reprinted material must include a copyright notice in the following format: "©2023 UL LLC."

Cookies on UL Solutions
We use cookies to personalize content and ads, to provide social media features and to analyze our traffic. We also share information about your use of our site with our social media, advertising and analytics partners. Learn more